MANCHESTER 1824
The University of Manchester

Department of
Electrical and
Electronic Engineering

Embedded Systems Project 2024-25

DESIGN REPORT #2

Technical Characterisation

Group Number: 39

Group members:	ID Number	I confirm that this is the group's own work.
Emmanuel Pacholek	11439049	☒
Jamie Ashton	11071316	☒
Junbyung Park	10936972	☒
Yik Hay Ryan Ho	11416243	☒
Zhe Shang	11056225	☒

Tutor: Andrew Forsyth

Date: 29/11/2024

Contents

1 Introduction 1

2 Software architecture 1

3 Line Sensors 3

4 Non-Line Sensors 11

5 Control 13

6 Hardware Overview 16

7 Summary 20

8 References 21

1 Introduction

This project aims to design an autonomous line-following buggy with optimized speed and precision. The purpose of this report is to support optimization across various aspects of the project, including software, sensors, and hardware design, which are crucial for maintaining high speed and achieving success in the race.

The report discusses key design decisions, including the chassis structure and material, software architecture, and sensor selection. It examines the overall software architecture in relation to the buggy's sensors, determining the ideal sensor combinations and configurations. Based on this analysis, control system decisions, such as algorithm selection and implementation, are addressed.

The hardware design is also explored, with a focus on structural strength and manufacturability, enabling a detailed analysis to select appropriate chassis materials in conjunction with the chassis design. This report provides a comprehensive overview of the system architecture, control algorithms, and hardware design of the buggy, detailing how these essential components will work together to achieve the project's objectives.

Additionally, a detailed chassis design, including layout and material considerations, is presented. By addressing these critical design aspects, this report establishes the foundation for implementing, testing, and delivering a robust, competitive autonomous vehicle.

2 Software architecture

The flexibility and extra control that the **low-level libraries** grant over the Mbed framework warrant our choice to go with them.

In practice, a quick overview of the main components our system:

Main States:

- initialisation state (to set up the clocks, interrupts, adc, …)
- flat surface
- Ramp
- Line break (sets steering PID to 0)
- End of circuit (extended line break)
- Remote stop and turn

Some interrupts/timers:

- BLE signal check >> Ticker/Interrupt
- ADC sampling >> Ticker/Interrupt
- LEDs on/off >> Ticker/Interrupt
- Current draw >> Ticker/Interrupt
- Battery voltage/current/capacity >> Ticker/Interrupt
- Encoder >> speed >> Ticker/Interrupt

Some key functions:

- Position_estimate (sensor values, led state) -> float

- Steering_PID (position, motors speed, stop_turn set/unset, end of line state, line break state) -> float
- Base_speed_PID (motors speed, target) -> float
- Turn_180()
- Each_motor_dutycycle (steering PID output, base speed PID output, battery info)-> PWMout

Plan of protocol use:

- **GPIO** (for controlling the LEDs, application shield, some motor drive board inputs…)
- **Analog - ADC** alternate function (position sampling, …)
- **BLE – GAP/GATT** (between the remote control and HM-10 module)
- **UART** (between the HM-10 module and the microcontroller)

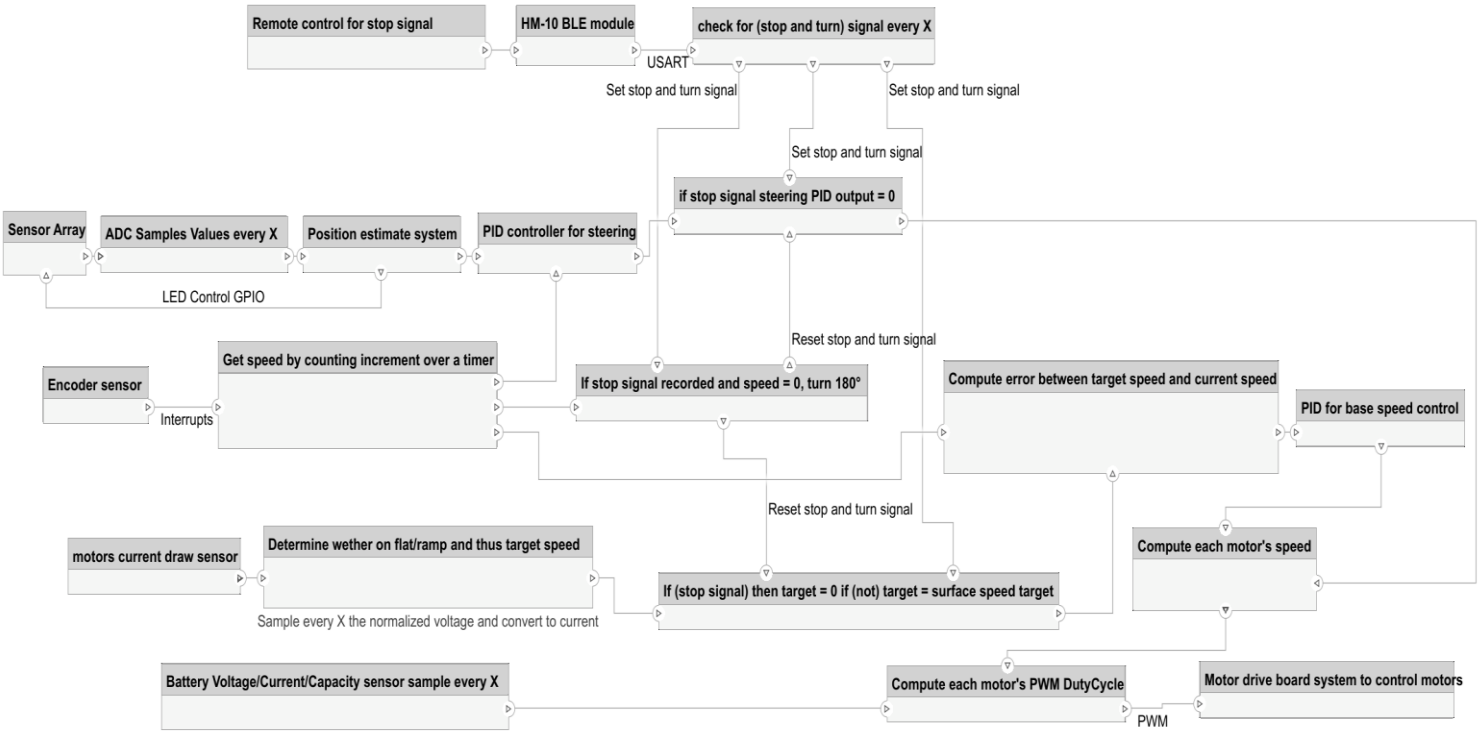

- **PWM** (for communication with the motor drive board and control of the motor)

In addition to this flow chart we should mention that if the Position Estimate System sees a line break then it simply sets the output of the Steering PID to 0, until the line break length, which is calculated with the help of the speed(encoder) and a timer, goes above 6mm point at which the systems sets the PID for Base Speed to 0 too.

Resources needed:

- 3 computers and microcontrollers
- Embedded debugger setup
- Periodic access to the buggy for testing purposes

- The initialisation phase can be done by a person (2-3 days) he can then go on to do the communication to the motor drive board system (2-3 days)
- The position system can be made by another person (4-5 days)
- The steering and base speed PID systems can be made by another (5-6 days)

3 Line Sensors

3.1 Introduction

In the design and operation of an autonomous line-following buggy, the accurate detection of the guiding line is critical for the buggy to navigate the track. The line sensor array is responsible for detecting the contrast between the guiding line and the surrounding track, informing the buggy's decisions of direction and movement. This section focuses on comparing the characteristics of three different line sensors to select the most suitable sensor for this project and characterizing the chosen sensor through the experimental methods laid out in the technical handbook **[1].**

3.2 Sensors Investigated

- The **Vishay TCRT5000** is a reflective optical sensor with transistor output and an IR emitter input housed in a leaded package.
- The **Vishay BPW17N** is an NPN phototransistor which has been paired with the **Vishay TSHG6400** infrared-emitting diode.
- The **TT OPL550** is an IC containing a photodiode, amplifier, voltage regulator, Schmitt trigger and NPN output transistor on a single silicon chip. It differs from the other 2 sensors in that it outputs TTL logic levels. This has been paired with the **TT OP140A**, an infrared emitting diode.

3.3 Pairing Emitters and Sensors

The characteristics of the three sensors and corresponding photoemitters are shown in table 1, obtained from datasheets **[2], [3], [4].** The sensors were paired with the emitters by matching peak wavelength of emission with the peak sensitivity of detection, the specific wavelength of light at which the sensor is most responsive. This maximizes detection of reflected light and helps to minimize interference from other light sources. The spectral sensitivity of the sensor of the TCRT5000 is optimized for its IR emitter, and the OPL550's peak wavelength of detection is matched to the OP140A's peak wavelength of emission.

3.4 Comparison of Sensor Characteristics

Photoemitter	**Vishay TCRT5000**	**Vishay TSHG6400**	**TT OP140A**
Wavelength peak (nm)	950	850	935
Suggested forward current for LED (mA)	10	20	20
Beam half angle at half intensity (degrees)	±15	±27	±20

Typical forward voltage at suggested current (V)	1.2	1.6	1.6

Photodetector Transducer/ Photodiode	**Vishay TCRT5000**	**Vishay BPW17N**	**TT OPL550**
Spectral sensitivity range (nm)	Optimised for peak	450-1040	Matched to OP140A
Wavelength peak (nm)	950	825	935
Suggested supply voltage (V)	5		4.5-5.5
Beam half angle at half intensity (degrees)	±15	±12	±50 (approx.)
Typical response time (ms)	N/S	5	0.2
Power dissipation (mW)	100	100	200
Output type	Analogue	Analogue	Digital

Table 1: Sensor and Emitter Characteristics

3.5 Evaluating the Sensors

OPL550: The OPL550 sensor compares detected light intensity against a built-in threshold, outputting a logic level of low (1 mV) or high (4.2 V). Its digital output allows direct interfacing with the microcontroller without additional circuitry. However, the paired LED's wide irradiance pattern risks crosstalk between sensors and the lack of analogue output prevents detailed positional information of the buggy's position on the line. These limitations make it unsuitable in implementing the PID control algorithm and therefore unsuitable for this project.

Vishay BPW17N: The BPW17N has a higher spectral sensitivity range than the TCRT5000 and is more affected by ambient light, risking contrast loss between the track and the line and saturation in direct sunlight. Optical filtering and shielding can help to mitigate this but adds complexity to the design along with its lack of housing and need for separate emitter and detector adds complexity. Although it has a marginally narrower angle of half-sensitivity than the TCRT5000, it is less optimized for reflective work.

Vishay TCRT5000: Lower spectral sensitivity and in-built IR filter, the TCRT5000 is less affected by sunlight than the BPW17N. Its integrated detector and emitter simplify mounting, and its narrow angle of half-sensitivity supports precise line detection. The compact housing and integrated filter streamline installation and prevent direct ambient light from entering the signal, adding robustness to the sensor array.

Based on these key points, the **Vishay TCRT5000** is the sensor that will be used in our design. To ensure the sensor meets its design requirements, its output needs to be fully characterised. The following part of this section will detail the experimental methodology, results, and analysis, with a focus on sensitivity and response to environmental factors.

3.6 Measurements & Experimental Set-up

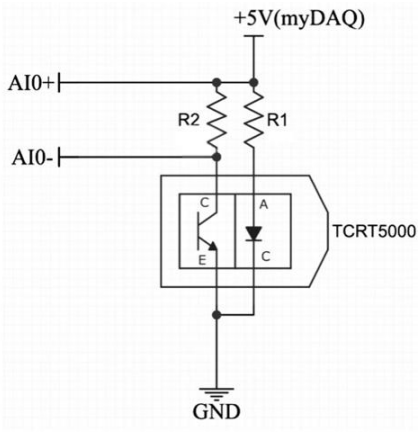

- Maximum forward current = 60 mA.
- Diode forward voltage typically 1.2 V
- R_2 is current limiting resistor.
- AI0+ and AI0- analogue inputs of MyDAQ, National Instruments Oscilloscope used to take voltage measurements.
- Voltage measurements taken across R_2 rather than the phototransistor itself as voltage across varies linearly with collector photocurrent, this is easier to characterize and interpret.

Figure 1: Experimental Setup

Measurement 1: Dark Current and Background Illumination Current

To measure the dark current of the sensor (current when there is no incident light) the emitter was disconnected from the power supply and the sensor was covered with a dark cloth. The voltage output of the sensor was measured, and the dark current calculated using Equation 1. To measure the background illumination current (current generated due to ambient light) the emitter was disconnected from the power supply and the sensor was placed in moderate indoor lighting conditions (approximately 500 lumens per square meter). The voltage output of resistor R_2 was measured and the background illumination current calculated using Equation 1.

$$I_{dark} = \frac{V_{dark}}{R_2} \qquad I_{background} = \frac{V_{background}}{R_2}$$

Equation 1: Dark Current & Background Illumination Current

Results:

Analogue Sensor	R_2 (W)	V_{dark} (mV)	I_{dark} (nA)	$V_{background}$ (mV)	$I_{background}$ (nA)
TCRT5000	3300	170	17	375	51
BPW17N	10,000	540	54	2400	240

Table 1: Measurement 1 Results & Parameters

- The OPL550 output a logic level low in both dark conditions and with moderate background illumination.

Error Analysis & Improvements to Procedure

- Dark current measurements were not made in a perfectly dark environment, likely that some ambient light was present.
- This can be seen as insignificant as values of dark current are consistent with typical values described in datasheets.

Measurement 2: Variation of Sensor Output with IR LED Forward Current
Setup

The experimental set-up outlined in Figure 1 was modified by changing the value of the current limiting resistor R_1. 5 different values of forward current were investigated, at varying heights above the track. Forward current was calculated using equation 2, where I_f is the forward current through the diode, V_{CC} is the MyDAQ +5V power supply, and V_{diode} is the forward voltage drop across the LED.

$$I_f = \frac{V_{CC} - V_{diode}}{R_1}$$

Equation 2: Diode Forward Current

Results:

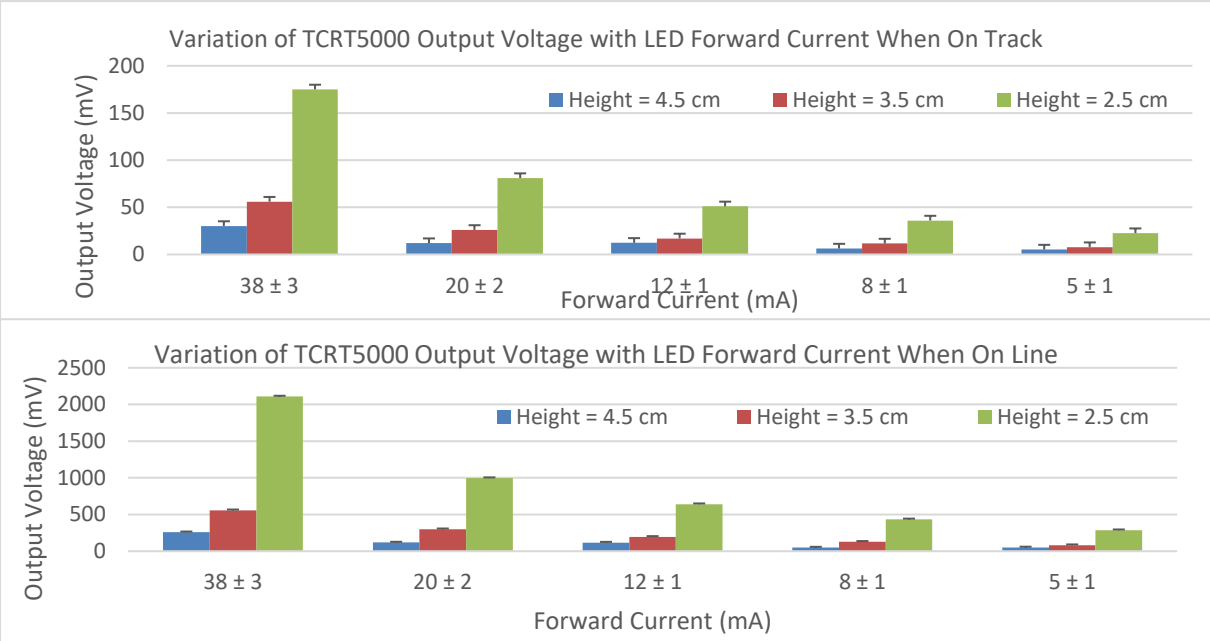

Figures 2 & 3

- At lower forward currents the sensor has low sensitivity and reduced differentiation between the track and line.
- A forward current of 20 mA provides optimal sensitivity with clear distinction between track and line whilst reducing power consumption and heating effects that would be more present with a forward current of 38 mA.
- Though it may give better distinction between the line and track, using a higher forward current would result in increased power consumption undesirable for a battery-operated buggy.

Error Analysis & Improvements to Procedure

- A more comprehensive set of results could have been obtained for values of current higher than 20 mA.
- Obtaining a larger and more varied supply of resistors would have allowed this.
- All resistors used had tolerances of ±5% leading to the provided uncertainties in values of forward current through standard uncertainty propagation rules.

- Error bars have been included, based on the output voltage offset caused by dark current and background illumination, however they are small enough as to be negligible.

Measurement 3: Variation of Sensor Output with Height

Setup

The experimental set-up outlined in Figure 1 was modified to provide a fixed forward current I_f of 20 mA by setting $R_1 = 220\ \Omega$ according to Equation 2. The sensor was positioned above the track and the output voltage was measured across R_2 for a range of different heights, corresponding to different rows in the provided test rig. The sensor was then positioned above the line, and the procedure was repeated.

Results

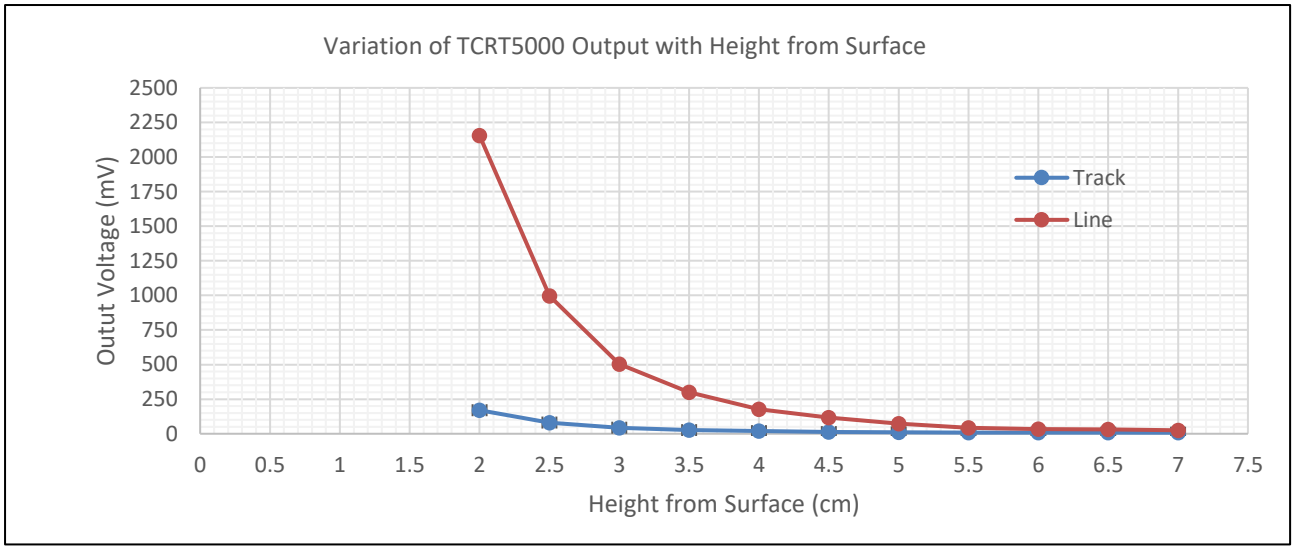

Figure 4

The output voltage across R_2 varies significantly with the sensor's height above the surface. As the distance increases, the intensity of reflected infrared (IR) light received by the sensor decreases, and the emitted IR beam spreads wider reducing the concentration of light reaching the surface. As such the output voltage across R_2 decreases with distance from the surface in an approximate inverse-square relationship. For heights that exceed the sensors effective range as described in the datasheet **[2],** the reflected light intensity falls below the detection threshold, and the output voltage decreases severely.

The output voltage across R_2 varies significantly depending on the surface material. The white material of the track, with its high reflectivity, produces a strong reflection at close distances, resulting in a high photocurrent and a high output voltage across R_2. The black surface of the track, which has much lower reflectivity, reflects little IR light back to the phototransistor. At the same height, the phototransistor generates a much lower photocurrent and the voltage across R_2 is reduced to 1-200 mV.

A sensor height of 2.5-1.5 cm is optimal. At this height there is a distinguishable difference in output signal when the sensor is over the track and the line.

Error Analysis & Improvements to Procedure

- Vernier callipers could have been used to get a more precise measurement of sensor height.
- The fixed height increments (0.5 cm) and the minimum starting height (2 cm) meant that the provided sensor rig limited the heights that could've been investigated.

Measurement 4: Line Spread Function

Setup

The experimental setup in Figure 1 was used and a diode forward current I_f of 20 mA was used by setting R_1= 220 W. A ruler was attached to the test rig and the voltage across R_2 was measured for different positions along the length of the test rig. The line begins at 7cm and ends at 9cm. This procedure was repeated for 3 different sensor heights.

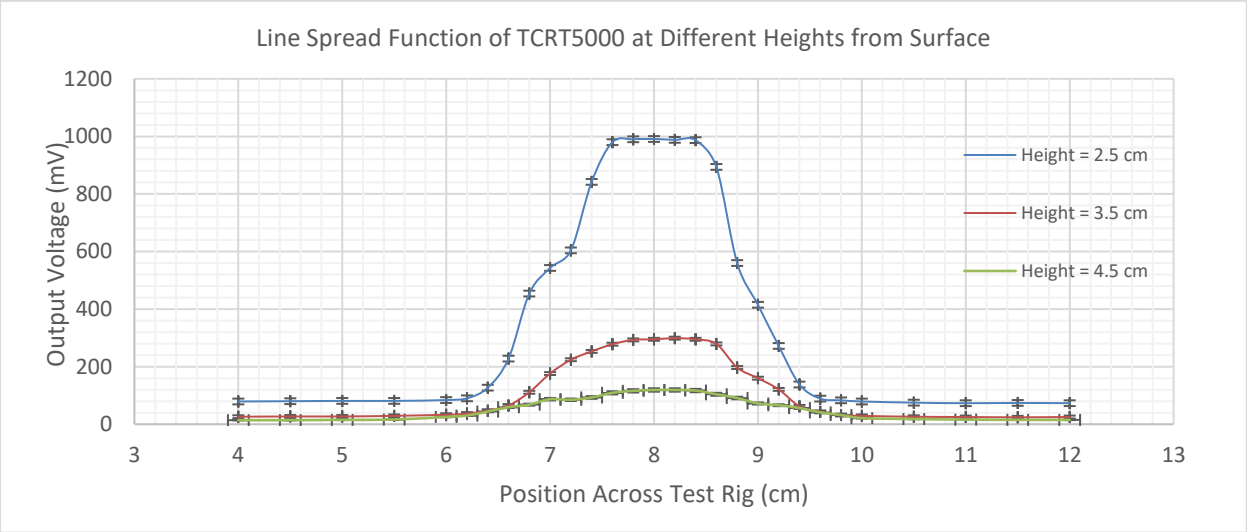

Figure 5

- The peak voltages across R_2 occur at around 8 cm, so this is where the peak photocurrent occurs.
- This is the centre of the white line and marks the point where minimal blurring occurs, at this point almost all emitted IR light is reflected by the line and not absorbed by the track.
- As the sensor approaches the edges of the line (at 7 cm and 9 cm) blurring increases and the voltage across R_2 reduces to approximately half, this marks the position where the sensor is over the edge of the line.
- At 4.5 & 11.5 cm the sensor is completely over the track. There is little reflection of emitted IR, and a negligible background illumination offset so the voltage across R_2 diminishes.

Error Analysis & Improvements to Procedure

- The line spread function could've been determined for a larger range of sensor heights.

- Values of output voltage could have been taken at smaller intervals of distance showing more precise behaviour of the sensor as it passes over the line.
- Error bars have been included, based on the output voltage offset caused by background illumination as the room in which the measurements were taken was bright, however they are small enough as to be negligible.

3.7 Further Considerations

Line Breaks

Gaps or discontinuities in the guiding line can cause sensors to lose track of the line, leading to buggy drift and potential failure to reacquire the line. Predictive control can mitigate this by maintaining the buggy's trajectory until the line is reacquired. Additionally, a sensor array spanning the buggy's width can help detect the line's position and reduce erratic movement.

Signal Noise

The TCRT5000's dark current (17 nA) introduces a slight offset in the output signal. To minimize fluctuations, adequate airflow should prevent sensor heating, and the buggy should not remain powered for long periods. Background illumination current also adds offset, though physical shielding helps reduce this interference, complete elimination is not feasible.

3.8 Summary

The TCRT5000's compact design, integrated filter and simplicity of implementation make it ideal for precision and robustness. Experimental characterisation confirms its ability to distinguish from the guiding line and track under varying environmental conditions, enabling effective integration into the buggy.

Schematic for Line Sensor Array

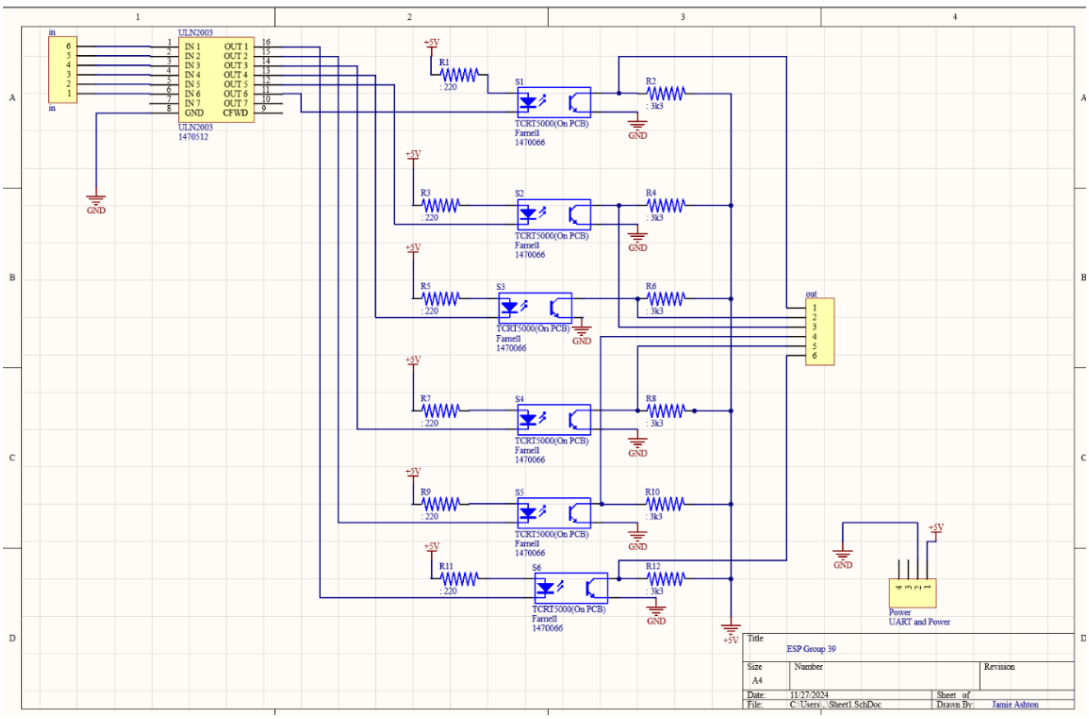

Figure 6: Schematic Diagram for Line Sensor Array

The emitters are controlled via Digital Out pins on the STM32 microcontroller, specifically PA_5, PA_6, PA_7, PB_6, PC_7, and PA_9. These pins are connected to a Darlington array and current-limiting resistors to manage high-current LED operations. The Darlington array, implemented as a ULN2003a IC, enables the microcontroller to efficiently drive and toggle the LEDs.

The sensors, paired with resistors, convert small photocurrents into readable voltages. Their outputs are connected to the STM32's Analog In pins: PA_0, PA_1, PA_4, PB_0, PC_1, and PC_0. The STM32's ADC provides sufficient channels to process all six sensor outputs effectively.

PCB Design

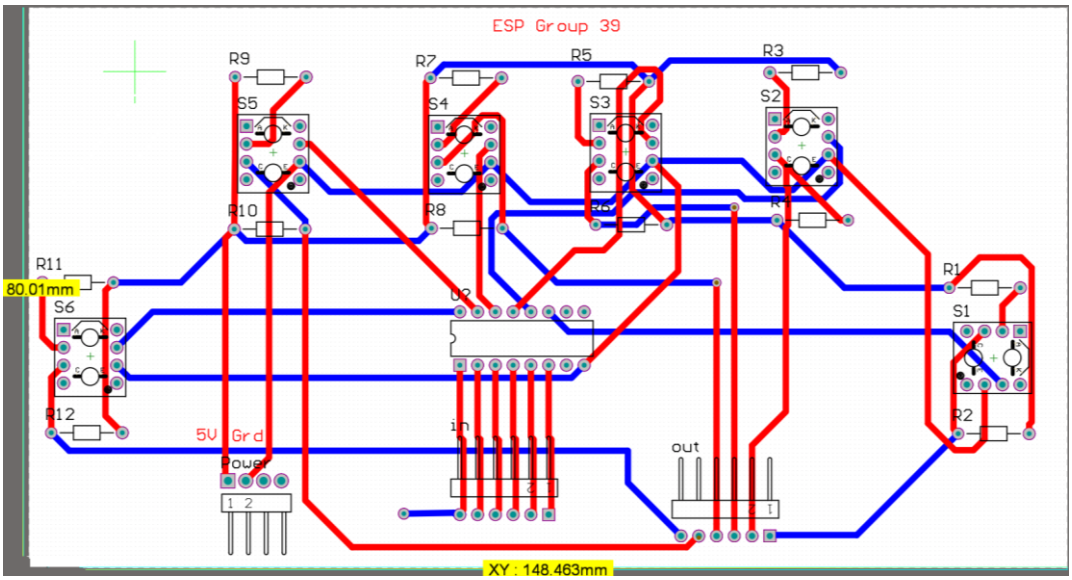

Figure 7: PCB Design

4 Non-Line Sensors

4.1 Introduction

This section outlines the buggy's non-line sensors, focusing on their capabilities, the communication methods used with the microcontroller, and their implementation. These sensors enable the buggy to monitor its state and performance, crucial for control systems and monitoring. Key areas of focus are:

- **Capabilities:** Outlines what the sensors are capable of measuring.
- **Communication:** Outlines interaction with the microcontroller.
- **Implementation:** Outlines how the sensors and microcontroller will be set up.

Analogue Vs Digital Sensors

Communication:

Analog sensors send voltage signals to ADC channels, converting them into numerical data, while digital sensors send binary signals directly to GPIO inputs. This ensures continuous real-time updates for the microcontroller to process and act on.

Implementation:

Analog sensors use thresholds for interpretation while digital sensors rely on interrupts or polling. Calibration is vital to adapt the sensors to environmental conditions, ensuring consistent and reliable performance.

4.2 Encoders

AEAT-601B-F06 Hall Effect Quadrature Encoder

Capabilities

The AEAT-601B-F06 Hall Effect Quadrature Encoder is a critical component for measuring the buggy's speed and direction. By generating precise digital signals, the encoder enables the buggy to maintain accurate control over its movement and respond to changes in its environment effectively.

The encoder also enables speed calculation using the number of detected pulses within a specific time interval. By combining the pulse count with the wheel circumference and the encoder's resolution, the microcontroller can determine the buggy's velocity in real time. Additionally, the relative phase of signals A and B is used to ascertain the direction of motion, with forward or backward movement indicated by whether signal B leads or lags signal A **[5]**.

Communication

The encoder outputs two pulse signals, labelled A and B, which are read by the microcontroller to determine rotational motion. Signal A represents the tick pulses of the encoder, while signal B is offset by 90° to indicate direction. The microcontroller processes these signals through dedicated timer peripherals such as TIM2 or TIM5, allowing for accurate tracking of wheel rotations.

Implementation

To implement the encoder functionality, the Mbed framework is utilized to configure GPIO interrupts and timers for pulse counting. This setup ensures precise measurement and integration into the buggy's control systems. Proper testing and calibration of the encoder are performed to validate its performance across various operating conditions, ensuring reliable feedback for speed and direction control.

4.3 Current Sensing Circuits (Motor Drive Board)

Capabilities

The current sensing circuit is a crucial component for monitoring the motor's current draw, ensuring safe and efficient operation of the buggy. By leveraging precise measurement techniques and isolation, the circuit facilitates real-time feedback for motor control.

The circuit measures the current flowing through the motor by detecting the voltage drop across a 0.1Ω resistor placed in series with the motor. This voltage is fed into isolation amplifiers (ACPLC784), which produce differential analog outputs while maintaining electrical isolation between the motor and the microcontroller. The isolation ensures safe operation and eliminates noise interference, enabling accurate measurements **[6]**.

Communication

In terms of communication, the differential outputs from the isolation amplifiers are read by the microcontroller's ADC. The microcontroller processes these analog signals to calculate the current flowing through the motor, which can then be used for dynamic performance optimization.

Implementation

Implementation of the current sensing circuit involves setting up two isolated channels—IsenseA and IsenseB. The voltage differences are measured at the respective inputs (e.g., IsenseA+ and IsenseA). The isolation amplifiers amplify and isolate these signals, outputting voltages referred to the midpoint of their power supply. To power the isolation amplifiers, the LM3480 IC is used to provide a floating supply across the motor-side isolation barrier. These outputs are connected to the microcontroller for processing, enabling comprehensive monitoring and control.

4.4 Battery Monitor

Dallas DS2781

Capabilities

The battery monitor is designed to track the buggy’s power usage, ensuring reliability and preventing damage to the battery and motor. It performs voltage and current measurements, with additional capabilities for temperature monitoring and battery capacity estimation **[7]**, though the latter features are not implemented in this iteration.

Communication

The system is capable of handling analog signals via an ADC or using the Maxim 1-

Wire interface for efficient digital communication.

Implementation

Voltage measurement allows the monitor to track the battery's charge level and detect low-voltage conditions that could damage the battery or affect performance. Current measurement helps in identifying overcurrent scenarios, providing critical data for system protection.

Sensors are integrated into the buggy's electrical system to measure voltage across the battery and current through the motor. The microcontroller is configured to process data from these sensors, enabling real-time monitoring and control. Calibration is performed to ensure the sensors provide accurate readings under different operating conditions. Additionally, data logging is used to store measurements for performance analysis and troubleshooting, contributing to improved reliability and system optimization.

5 Control

5.1 Introduction

This section outlines the control system and its relation to the sensor selection process detailed in section 3.

As shown in Figure 8, the first step of the control system is to determine where the line is and its discrepancy between the buggy's centre axis at its front. The error magnitude and direction can then be used to determine the required speed adjustments on both motors to turn the buggy and return to the correct position and orientation. To achieve smooth turning, one motor reduces in speed and the other increases in speed, this allows the buggy to turn to the side with the slower motor and allows accurate turning with precise speed variations.

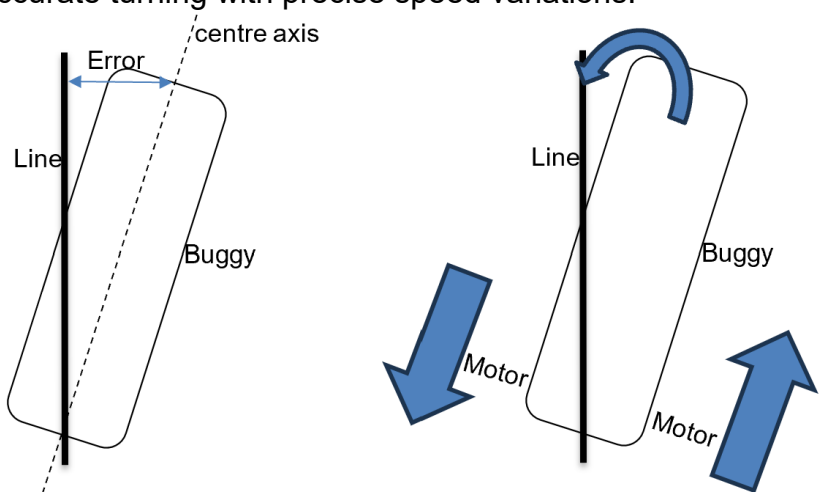

Figure 8: Diagrams to show action of the Control system.

5.2 Controller Types and Evaluation

There are two common types of controllers to achieve such control over steering: proportional and bang-bang controllers.

Proportional Controller: Provides a smooth and continuous control signal. Ideal for applications requiring smooth, precise, and predictable control, but may need careful

tuning and can be slower to respond to large errors.

Bang-Bang Controller: Only switches between two states (e.g. full left or full right). Suitable for simple, quick-response applications where precision is less critical, but can result in jerky and oscillatory movements and increased mechanical stress.

Evaluations: Proportional Controller is selected instead of Bang-Bang Controller in terms of precision, energy, and track specifications.

- **Accuracy and Precision**: Proportional controllers provide smoother, more predictable responses with reduced oscillations, ensuring better stability and control.
- **Energy Efficiency & Battery Life**: Smooth and gradual corrections typically consume less energy than abrupt changes, making the proportional controller advantageous for battery-powered buggies by extending operational time.
- **Track Specifications**: The simplicity of the tracks (involving relatively large turns) and the ample time available mitigate the drawbacks of a proportional controller, further supporting its selection.

As it brings great advantages in terms of precision and energy while its drawbacks are mainly mitigated by the specifics of the racetrack, Proportional Controller is selected.

4.3 Implementation of a Proportional Controller: Sensor Implementation

To implement a proportional controller, a continuous and precise knowledge of the line position is needed. Hence, the line sensors ought to be analogue rather than digital to eliminate the dead zones between the on/off digital signals.

To implement this, the microcontroller interfaces with the sensors via the ADC where two of the sensor values $\mathbf{V_1}$ and $\mathbf{V_2}$ are sampled and used to estimate precisely the position of the line at a given time.

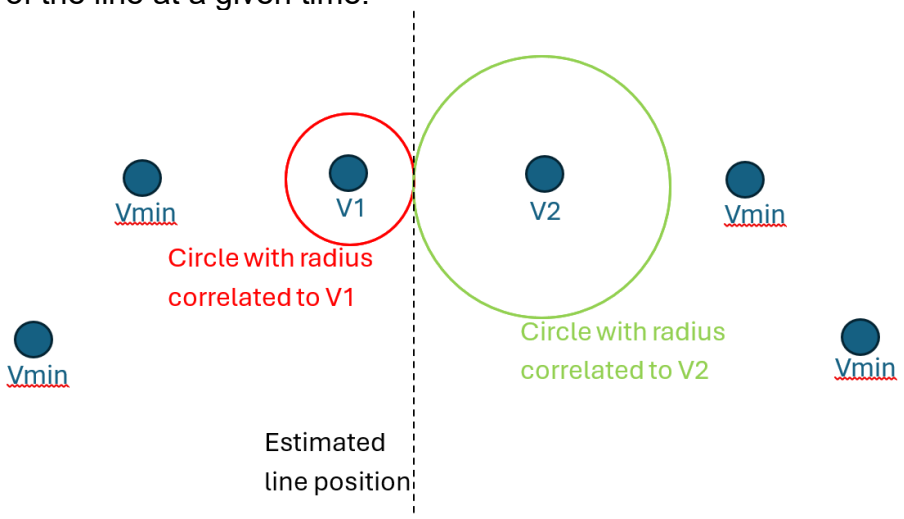

Figure 9: Visual representation of the intuition to the process of determining the line position

4.4 The Proportional-Integral-Derivative Controller

The PID controller introduces some enhancements to the simple proportional controller.

Proportional (P) controller: Simple and quickly response to changes in the

error signal. However, it may not eliminate steady-state error completely and can cause oscillations if the gain is too high.

Proportional-integral (PI) controller: Accumulates past errors to drive the steady-state error to zero, but can be slow to respond to changes, especially if the integral term is large and can cause integral windup, where the integral term accumulates a large value due to a persistent error, leading to overshoot.

Proportional-integral-derivative (PID) controller: Anticipates future errors based on the rate of change of the error and damps the system response, which reduces oscillations. However, it can be very sensitive to noise in the error signal, potentially leading to erratic control actions, thus often requires additional filtering.

4.5 Implementing the Proportional-Integral-Derivative Controller

To reduce oscillations and prevent overshooting, PID controller is selected. Filtering should be implemented by sending the derivative term through a low pass filter. This alleviates PID's erratic control actions to maintain a stable path.

PID is implemented with backwards Euler discretization described by Equation 3 **[8]**.

$$u[k] = -\frac{a_1}{a_0}u[k-1] - \frac{a_2}{a_0}u[k-2] + \frac{b_0}{a_0}e[k] + \frac{b_1}{a_0}e[k-1] + \frac{b_2}{a_0}e[k-2]$$

$$b_0 = K_p(1+NT_s) + K_iT_s(1+NT_s) + K_dN \qquad a_0 = (1+NT_s)$$

$$b_1 = -(K_p(2+NT_s) + K_iT_s + 2K_dN) \qquad a_1 = -(2+NT_s)$$

$$b_2 = K_p + K_dN \qquad a_2 = 1$$

Equations 3: Backwards Euler Discretization

The control loop we will use is shown in Figure 10 **[9]**:

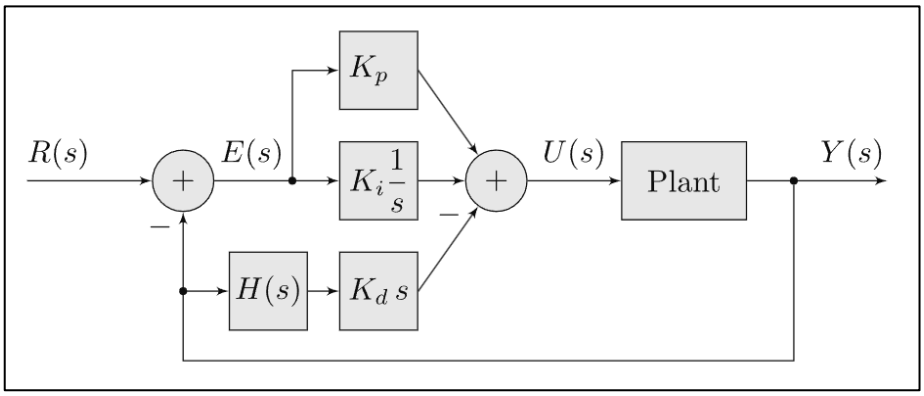

Figure 10: Control Loop

This implementation can be improved by clamping the controller's output to prevent the integral term from winding up when the output is already saturated.

4.6 Measures for Improvement: Mitigating Line Breaks and Sunlight Interference in Sensors

To handle line breaks, if no sensor detects the line, then the buggy will continue moving in the last recorded line direction (typically straight) for a set distance slightly greater than 4cm. This distance is the maximum length of line breaks described in

the technical handbook **[10]** and is calculated based on the buggy's speed and elapsed time. If the line remains undetected after this distance, it indicates the end of the track and the buggy stops. If the line is redetected, then we continue with the normal control loop.

To address the interference caused by sunlight, the following measures can be implemented to enhance sensor accuracy and reliability:

- **Sunlight Blocking:** If the inbuilt IR passing filter proves insufficient, a light black cloth can be used to block direct sunlight from reaching the sensors.
- **Background Subtraction:** The ambient light level when the IR LEDs are off can be measured and used as a baseline. This can be subtracted from the readings when the IR LEDs are active to isolate the signal from the line.
- **Dynamic Thresholding:** An adaptive algorithm that adjusts the voltage threshold based on the distance from the line and ambient light conditions can be implemented. This algorithm periodically sampling ambient light levels and recalibrate thresholds to maintain accuracy.
- **Signal Averaging:** As sunlight causes transient noise, averaging sensor readings over a short duration can minimize the noise. This method ensures smoother and more stable detection of the line position.
- **Normalization:** Sensor readings can be normalized by dividing each value by the maximum reading in the array. This approach reduces the impact of overall brightness changes due to sunlight, ensuring consistent sensor performance.

These enhancements can collectively improve sensor robustness, particularly in outdoor or high-light environments.

4.7 Control loop for base speed of buggy

The speed at which the buggy operates may need to vary based on track conditions. For instance, a specific speed may be set for flat tracks, a different speed for ramps, or the buggy may need to come to a complete stop by reducing its speed to zero. To achieve dynamic and responsive speed control, a PID control loop can be implemented for the buggy's base speed, similar to the approach discussed for the steering control loop.

The error input for this PID control loop would be the difference between the target speed and the current speed of the buggy, with the current speed serving as feedback measured via the quadrature encoders. The output of this PID loop would determine the base speed to apply to the motors. This base speed represents the uniform speed applied to both motors before any adjustments are made by the steering PID system.

6 Hardware Overview

6.1 Introduction

This section outlines the hardware design and analysis for the buggy project, focusing on efficiency, stability, and performance. Acetyl was selected as the chassis material for its light weight, cost-effectiveness, and sufficient strength. Key considerations include material selection, load distribution, and manufacturability, all

validated through deflection calculations and stress analysis. The design ensures optimal speed, battery efficiency, and manoeuvrability while meeting functional and competitive requirements.

6.2 Hardware Design

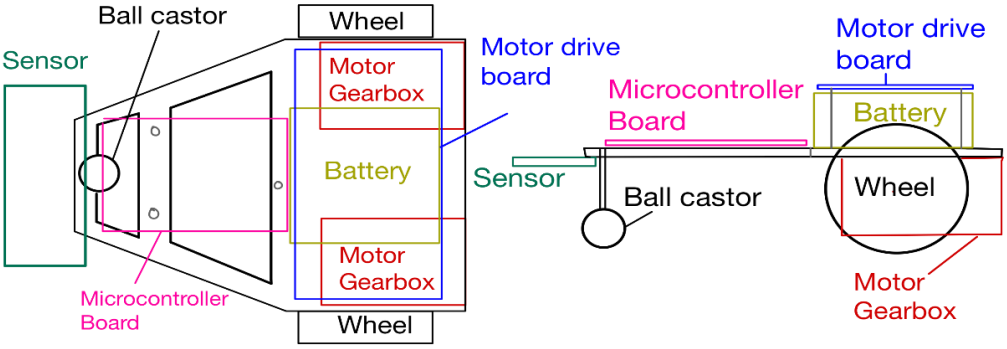

Figure 11: Chassis draft design

The center of mass is aligned close to the wheel shaft to minimize friction and enable more effective turns. Rear-wheel drive was selected to improve line-sensor detection at the front for earlier curve recognition. No additional chassis plate is used to hold the motor driver board to reduce the buggy weight. Proper positioning enhances the buggy's maneuverability and response to sharp turns.

6.3 Material Choice

Evaluating the trade-offs between cost, weight, strength, and manufacturability. The buggy chassis material was selected based on the following factors. The comparisons of 4 materials outlined in this section will be evaluated based on materials of equivalent volume.[11]

I. Material Cost:
Acetyl and mild steel are more cost-effective per volume compared to Aluminium, and Glass Reinforced Laminate.

Cost ranking: **Mild Steel > Acetyl > Aluminum > Glass Reinforced Laminate**

II. Weight:
A lightweight chassis improves speed and battery efficiency. Acetyl, with a density of 1.8 Mg/m^3, is the lightest option, followed by Glass Reinforced Laminate (1.9 Mg/m^3), Aluminum (2.7 Mg/m^3), and Mild Steel (7.8 Mg/m^3). This makes Acetyl the ideal choice for weight-sensitive applications assuming the chassis are in same volume.

Weight ranking: **Acetyl > Glass Reinforced Laminate > Aluminum > Mild Steel**

III. Material Strength:

Strength is crucial as excess strength allows the chassis thickness to be reduced, minimizing weight. Mild Steel offers the highest Ultimate Tensile Strength (UTS) at 414 MPa, followed by Aluminium at 310 MPa, Glass Reinforced Laminate at 175 MPa, and Acetyl at 67 MPa.

Strength ranking: **Mild Steel > Glass Reinforced Laminate > Aluminium > Acetyl**

IV. Ease of Manufacture:

The most critical factor to consider when designing a buggy is the ease of

manufacture. Lower production costs, a simplified manufacturing, and reduced production time are all essential to ensure efficiency. Moreover, simpler manufacturing allows for quicker adjustments and minimizes errors, contributing to a more streamlined production flow. Safety is another key aspect, as certain materials and processes require careful handling to mitigate risks. Acetyl is highly suitable due to its ease of shaping and manufacturing. Aluminum and Mild steel are also relatively straightforward to work with, however, cutting metal plates can produce sparks, fumes, and noise, requiring appropriate safety measures.
Final Material Selection:

As this project primarily focuses on the buggy's performance, Aluminium would be the ideal material if there were no budget constraints or production time considerations. Its superior Ultimate Tensile Strength-to-weight ratio allows for a reduced chassis thickness, resulting in the lightest buggy while maintaining structural strength. However, Acetyl was chosen for this project due to its cost-efficiency, ease of manufacture, quick prototyping capabilities, and lightweight properties. While Acetyl's lower strength and higher material cost compared to some alternatives were noted, the advantages in manufacturability and rapid prototyping outweighed these drawbacks, making it the more practical choice for this application.

6.4 Expected Buggy Mass

The Mass of Buggy includes 70 g for the microcontroller and its mount, 38 g for the breakout board, 53 g for the motor drive board, and 265 g for the battery pack. The pairs of motors, gearboxes, and wheels contribute 456 g, the ball caster adds 30 g. The line sensors collectively weigh 3.4 g, calculated as 0.68 g each for five sensors.

6.5 Deflection and Strength:

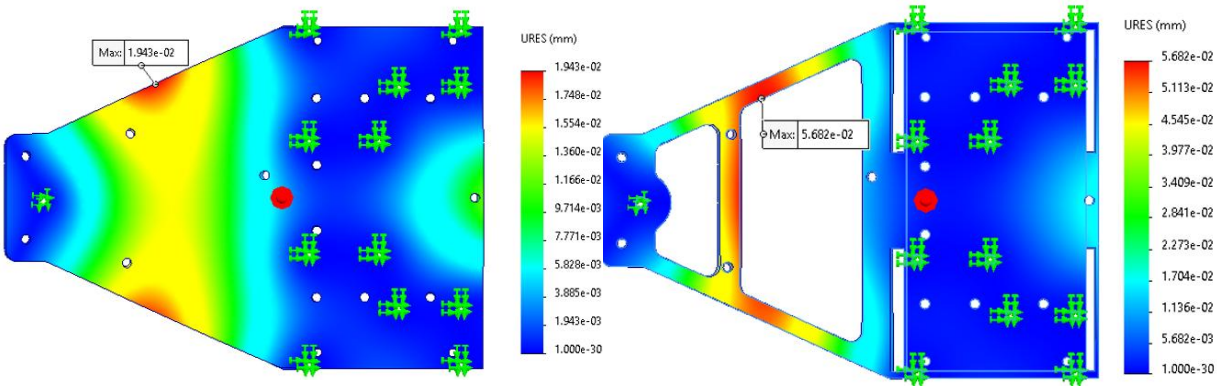

Figures 12 & 13: Deflection analysis on SolidWorks simulation

Acetyl was selected as the *final material*. However, its relatively low strength compared to alternatives, a deflection analysis was conducted. This ensures that under the dynamic forces encountered during the race, the chassis will maintain structural integrity and resist deformation. 3mm was used to minimize the weight. **[12]** The fixtures are identified with green arrows, while the gearbox and motor are designed to fit through the fixtures. Additionally, the ball castor is attached to the front of the buggy.

Deflection calculations were performed using SolidWorks simulation, based on a custom material, "Acetyl". Unknown material properties are estimated with respect to the values of Acetal.

The mass of gearbox, wheels, motor driver board, and battery pack components (774 g), was concentrated within the turquoise box on figure 13, between where the motor wheels located, accurately representing their localized weight distribution. The remaining component weights, such as the microcontroller, breakout board, ball caster, and line sensors (141.4 g), were distributed across the rest of the buggy chassis. This method ensures a realistic simulation of the overall load distribution, accounting for both centralized and distributed weights, which is essential for accurate structural and deflection analysis.

Aiming to create a competitive buggy with the potential to win the race, further trimming of the chassis was undertaken to reduce weight. The initial simulation indicated a maximum deflection of just 0.02 mm. Subsequent simulations showed a maximum deflection of 0.056 mm, a level of deformation negligible in terms of performance impact and alignment Issues of parts. To evaluate the chassis' resilience underweight-induced stress, a stress analysis was conducted, revealing a maximum tensile stress of 0.782 MPa. This is only 1.2% of Acetyl's ultimate tensile strength of 67 MPa, confirming that the applied stress is insignificant and well within safe limits. Final Buggy Design

Final Buggy Weight

The weight of the chassis has been determined using the SolidWorks mass evaluation as 66 g, bringing the total estimated mass of the buggy to 981.4 g

6.6 Final Buggy Design

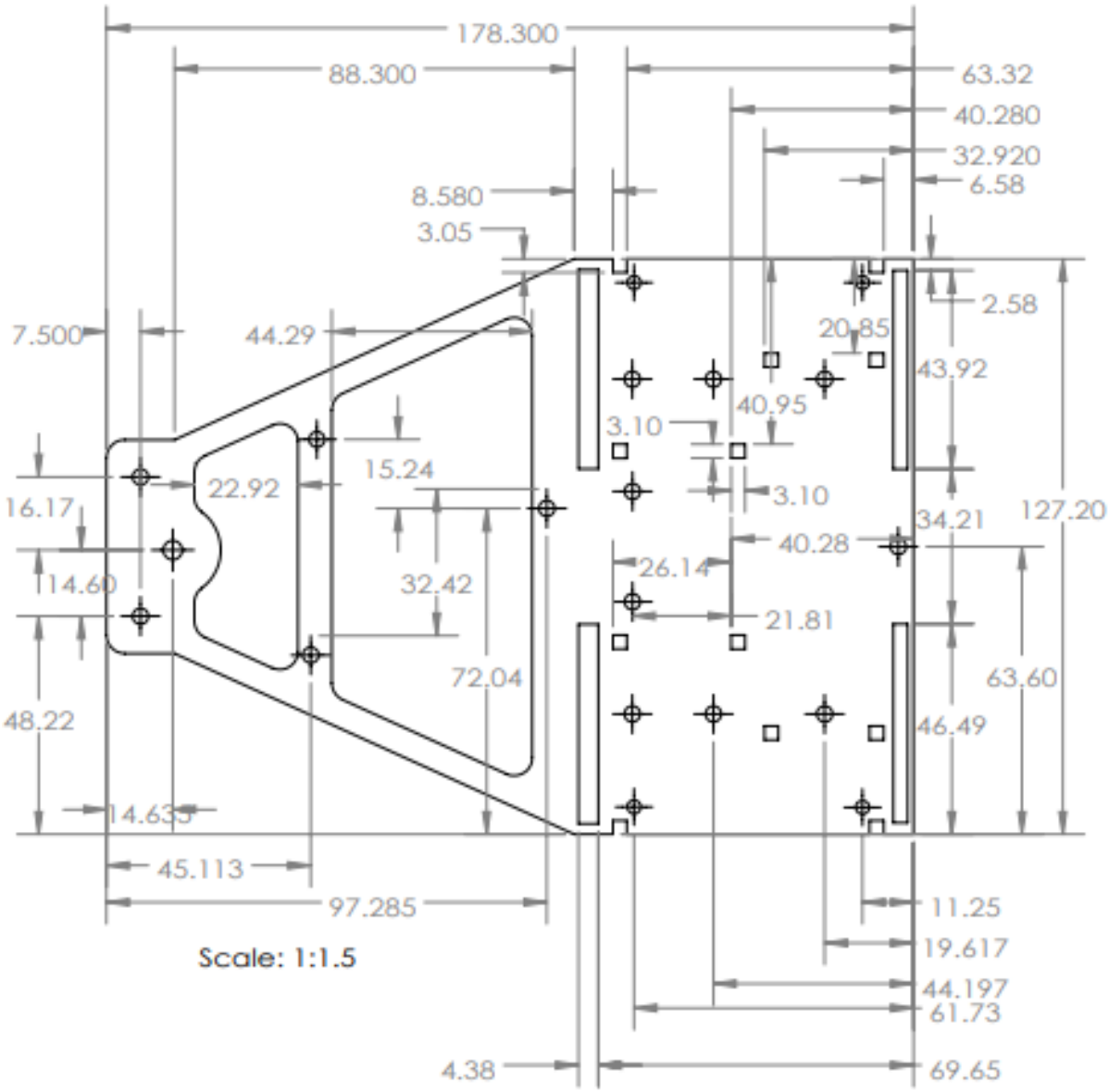

Figure 14: Buggy chassis schematic diagram

6.7 Summary on Hardware Overview

The buggy design focuses on performance and lightweight optimization. Acetyl was chosen for its ease of manufacture and low weight, with deflection and stress analyses confirming its suitability. Strategic component placement ensures minimal weight and adequate performance, resulting in a total mass of 981.4 g.

7 Summary

This report has provided a comprehensive overview of the technical design of our autonomous line-following buggy, focusing on system architecture, control algorithms, and hardware design to ensure precise and reliable navigation. Each design decision was evaluated to align with the project's objectives.

The TCRT5000 was selected as the optimal line sensor due to its reliability and low sensitivity to varying environmental conditions, ensuring accurate line detection. A PID controller was identified as the most suitable control algorithm, ensuring smooth

and efficient line following performance. The chosen chassis material Acetyl balances strength, ease of manufacturing, and weight, and the chassis design was optimized for speed, structural integrity, and efficient layout of all components.

These design decisions have been informed through thorough analysis and testing. As such, the proposed technical design outlined in this report will allow for successful implementation of a robust, competitive buggy.

8 References

[1] The University of Manchester, Department of Electrical and Electronic Engineering, page 61, “Sensor Characterisation”, in Technical Handbook 2024-2025, accessed Oct. 2024.

[2] Vishay Semiconductors, “Reflective Optical Sensor with Transistor Output,” TCRT5000 Datasheet, Aug. 2009 [Revised Jul. 2024]. https://www.vishay.com/docs/83760/tcrt5000.pdf (accessed Nov. 2024).

[3] Vishay Semiconductors, “Silicon NPN Phototransistor,” BPW17N Datasheet, Mar. 2005 [Revised Apr. 2005]. https://www.vishay.com/docs/81516/bpw17n.pdf (accessed Nov. 2024).

[4] TT Electronics, “Photologic Sensor,” OPL550 Datasheet, Apr. 2018. https://www.farnell.com/datasheets/2702462.pdf (accessed Nov. 2024).

[5] Broadcom, “Incremental Magnetic Encoder”, AEAT-601B-F06 Datasheet, Dec. 2009. https://www.farnell.com/datasheets/1884438.pdf (accessed Nov. 2024).

[6] The University of Manchester, Department of Electrical and Electronic Engineering, page 1, “Current Sensing”, in ESP Updated Current Calibration 2013, accessed Nov. 2024.

[7] Dallas Semiconductor, “On-Board Battery Monitor”, DS2781 Datasheet, Jun. 2006. https://www.analog.com/media/en/technical-documentation/data-sheets/DS2781.pdf (accessed Nov. 2024).

[8] D. Toochinda (2015, Mar.). *Discrete-time PID Controller Implementation*. Accessed on: 08/11/2024. [Online]. Available: https://www.scilab.org/discrete-time-pid-controller-implementation.

[9] P. Pieter (2020, Aug.). *PID Controllers*. Accessed on: 08/11/2024. [Online]. Available: https://tttapa.github.io/Pages/Arduino/Control-Theory/Motor-Fader/PID-Controllers.html.

[10] The University of Manchester, Department of Electrical and Electronic Engineering, page 6, “Track Specification”, in ESP Procedures Handbook 2024-2025, accessed Nov. 2024.

[11] The University of Manchester, Department of Electrical and Electronic Engineering, page 91, “Chassis Construction”, in *Technical Handbook 2024-2025*, accessed 18/10/2024.

[12] The University of Manchester, Department of Electrical and Electronic Engineering, “CAD - Solidworks Tutorials”, in EEEN21000 Embedded Systems Project 2024-25 Full Year, Blackboard, 36:03, accessed 29, DNov. 2024. Available: https://online.manchester.ac.uk/ultra/courses/_81509_1/cl/outline.